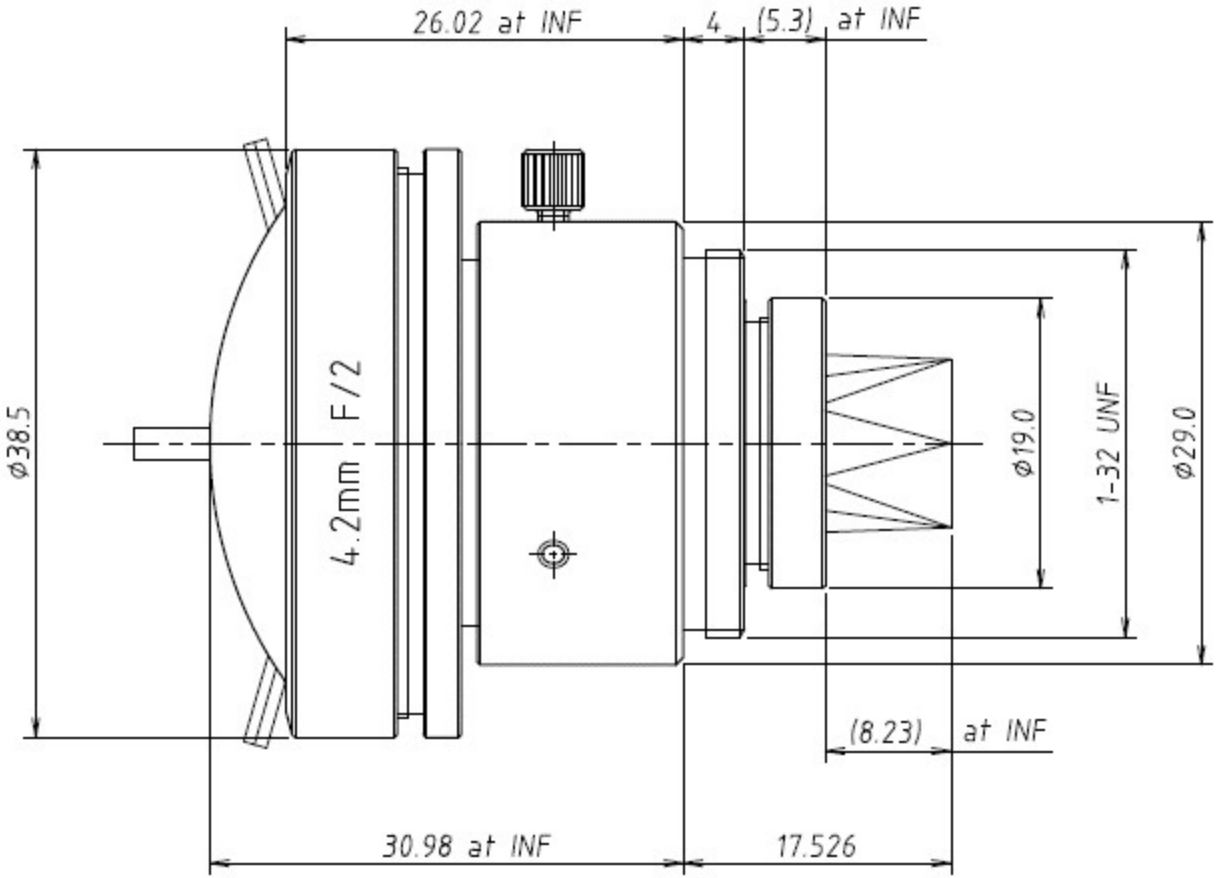
26.02 at INF
4
(5.3) at INF
ø38.5
4.2mm F/2
ø19.0
1-32 UNF
ø29.0
(8.23) at INF
30.98 at INF
17.526